GALAX

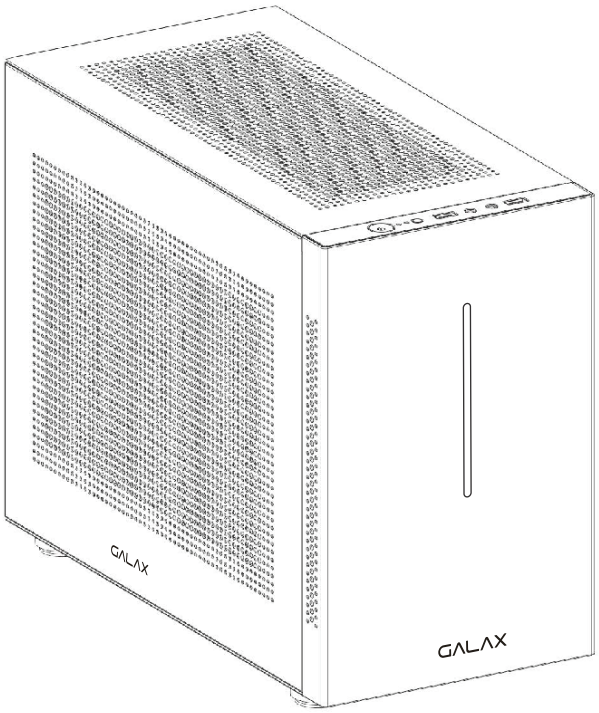

REVOLUTION-03

MINI-TOWER CASE

REVOLUTION-03

MINI-TOWER CASE

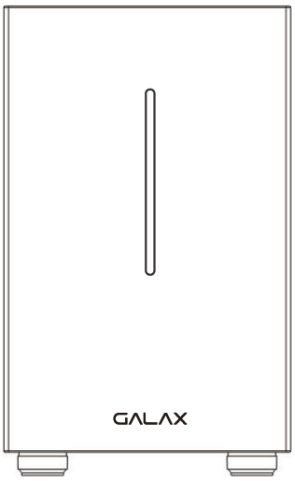

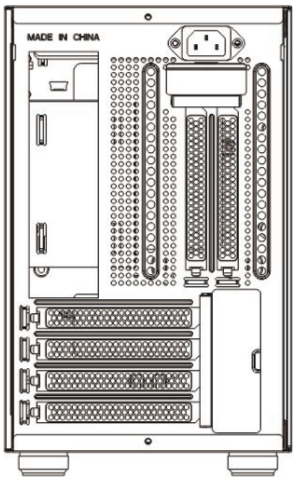

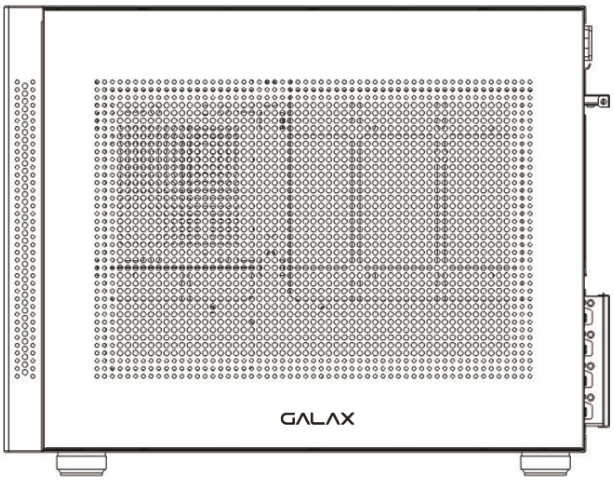

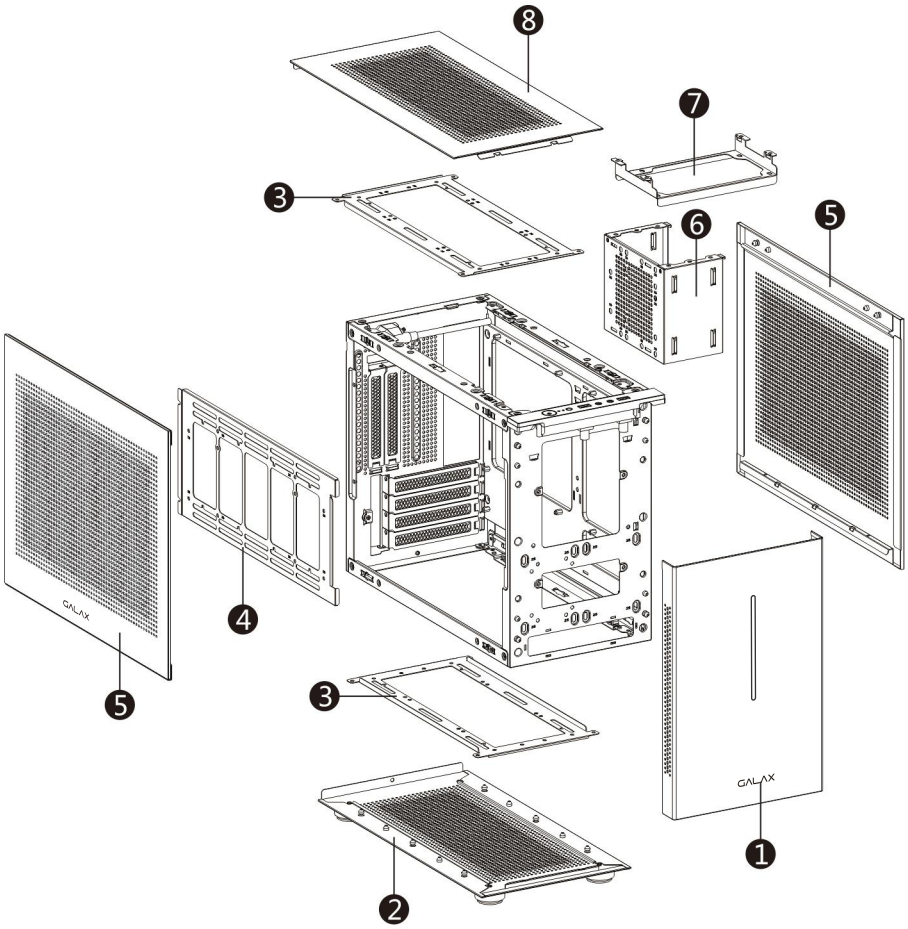

❶ Front Panel

❷ Bottom Plate

❸ HDD/Fan Bracket

❹ Left HDD/ Fan Bracket

❺ Side Cover

❻ Micro-PSU Bracket

❼ ATX PSU Bracket

❽ Top Cover

Product Specification

Product Name	GALAX-REVOLUTION-03
Chassis Size	350*185*288mm
Product Size	391*185*303mm
Package Size	463*272*380mm
Form Factor	MATX、ITX、M-ITX
Max CPU Cooler Height	155mm (Without Vertical GPU or fan bracket)
MAX GPU Length	335mm
Fan Support	Rear: 1*8cm Side: 2*12cm Top: 2*12cm Bottom: 2*12cm
Water Cooler Support	Left HDD/Fan Bracket: Support 240mm water cooler with SFX PSU Bottom: Support 240mm water cooler with ITX mother board
HDD Space	3.5"HDD*3 2.5"SSD*3
IO Ports	USB3.0*2 HD AUDIO

Accessories

Picture	Name	Usage	Quantity
	PSU Screws	Fix PSU	4
	HDD Screws	Fix 3.5'' HDD	8
	M/B Screws	Fix MB/2.5''SSD	16
	2.5''SSD Step Screws	Fix 2.5''SSD	4
	3.5''HDD Step Screws	Fix 3.5''HDD	4
	Gasket	Use on step screws to fix Harddisk	4
	Cable Tie A	Cable Management	8
	Cable Tie B	Cable Management	8
	Copper Cylinder	Used on MB	1
	Copper Pillar	Fix/Remove Cylinder	1

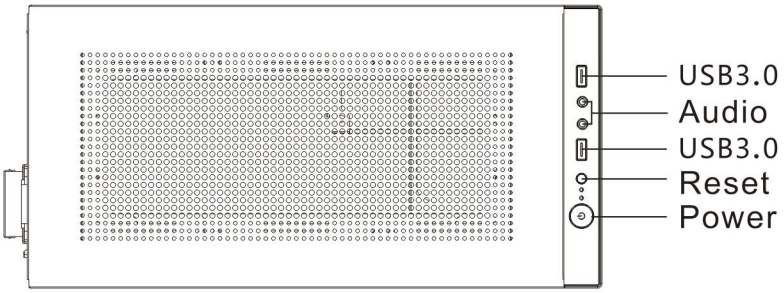

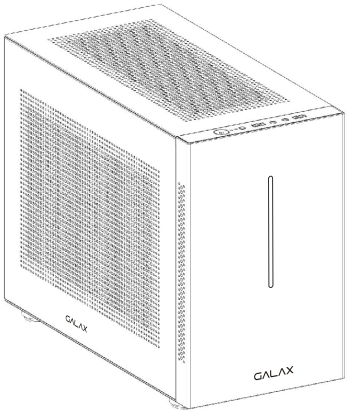

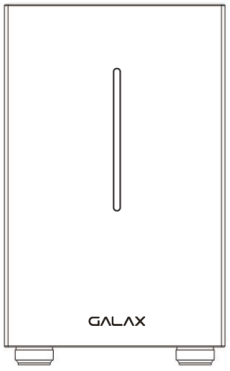

Disassembling

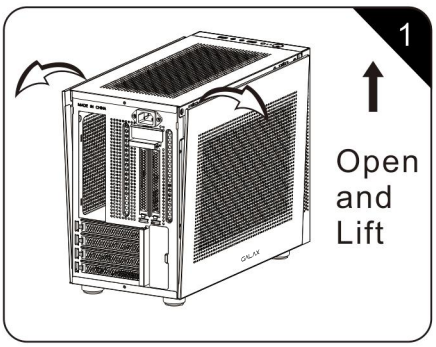

Remove side panels from the back

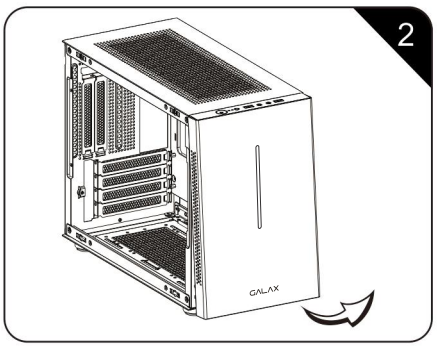

Remove front panel

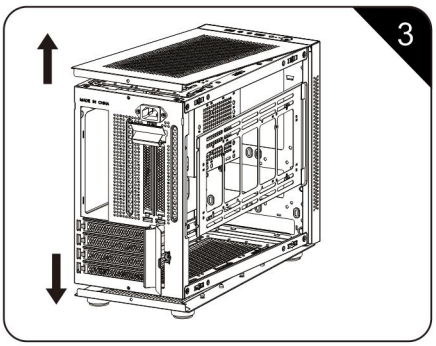

Remove screws on rear plate, then open top and bottom plate

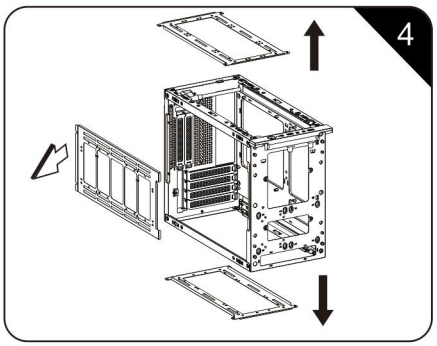

Unscrew to remove HDD/Fan bracket and the side bracket

MATX Installation Plan - MB Installation

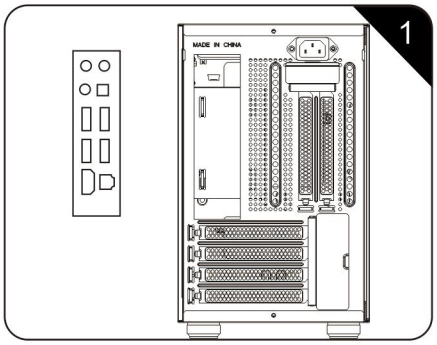

Get the IO slot ready

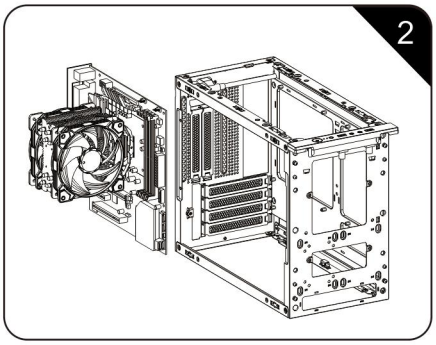

Put in MATX mother board to right location

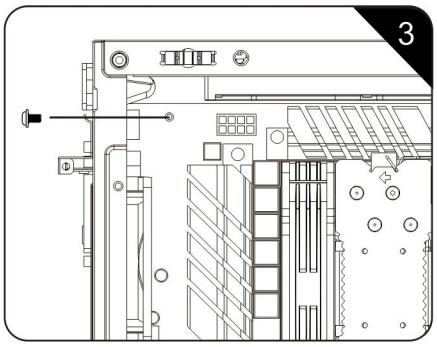

Fix with mother board screws

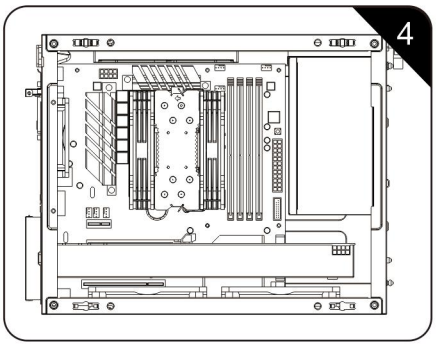

Finish

MATX Installation Plan - ATX PSU Installation

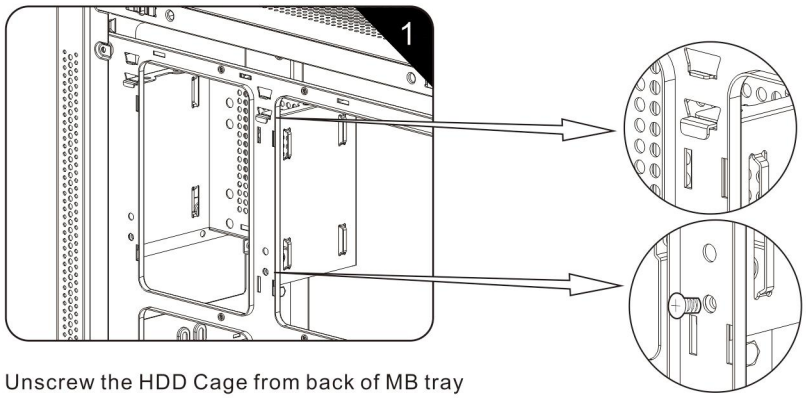

Unscrew the HDD Cage from back of MB tray

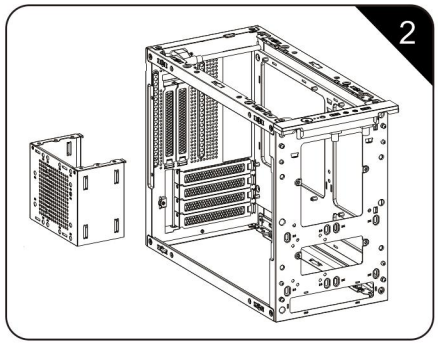

Remove the Micro PSU cage, put ATX PSU into the correct position

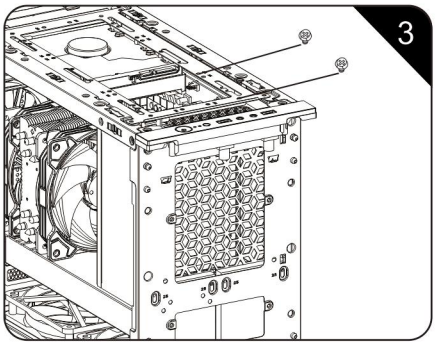

Fix with hex screws from the top

MATX Installation Plan - Installation of SFX PSU

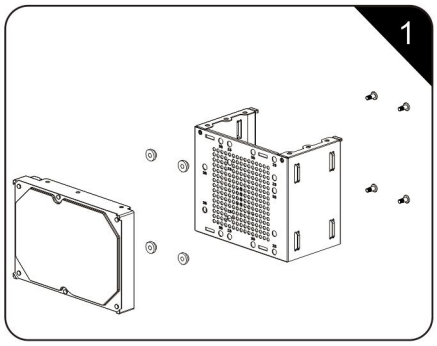

Put in gaskets before fixing
HDD/SDD with step screws
(Fix SSD with 2.5'' SSD screws)
(Fix HDD with 3.5'' HDD screws)

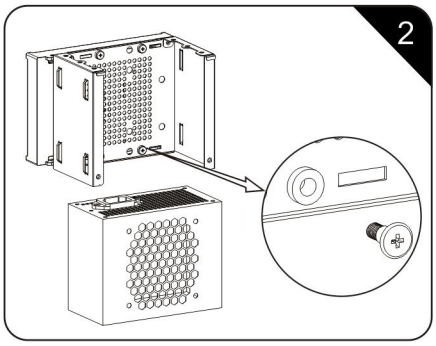

Put in the PSU and fix with hex screws

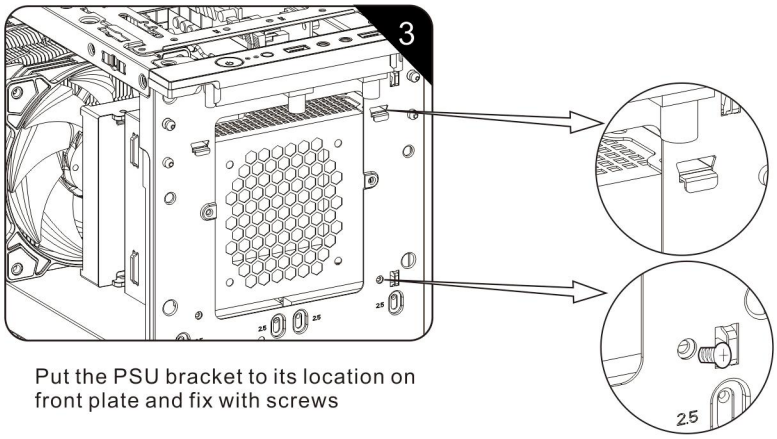

Put the PSU bracket to its location on
front plate and fix with screws

ITX Installation Plan - MB Installation

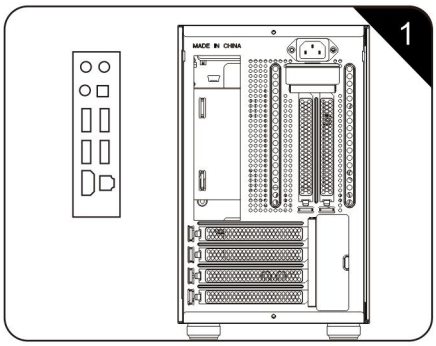

Get the IO slot ready

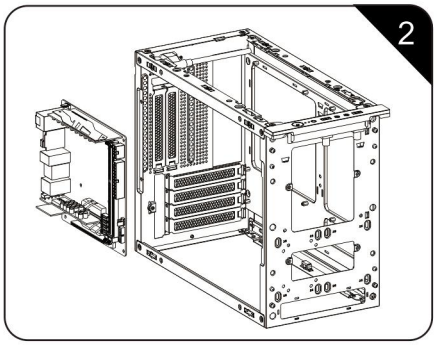

Put in ITX mother board to right location

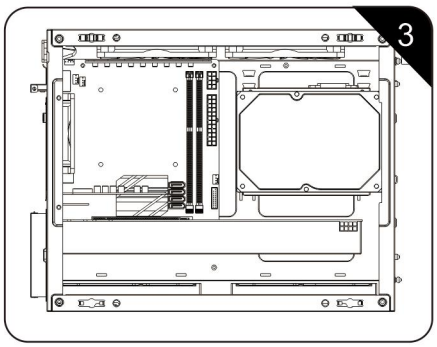

Put in ITX mother board to right location

ITX Mother Board Installation Plan - ATX PSU Installation

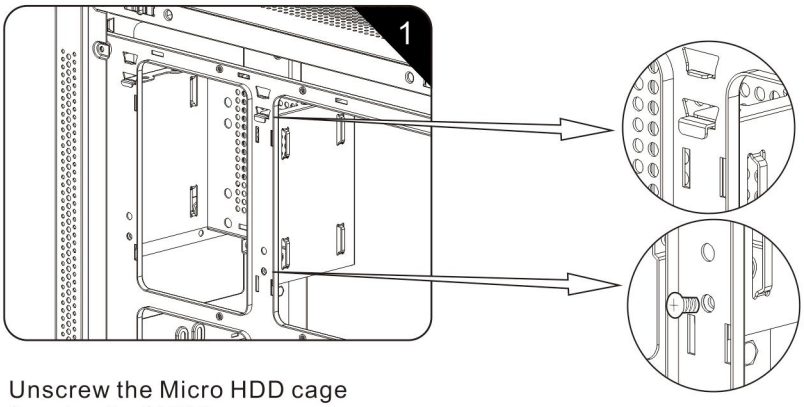

Unscrew the Micro HDD cage
from back of MB tray

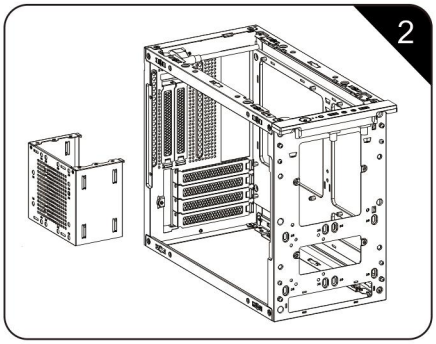

Remove the Micro PSU cage,
put ATX PSU into the correct
position

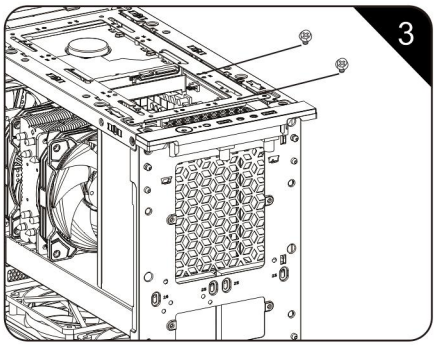

Fix with hex screws from the top

ITX Installation Plan - Installation of Micro PSU①

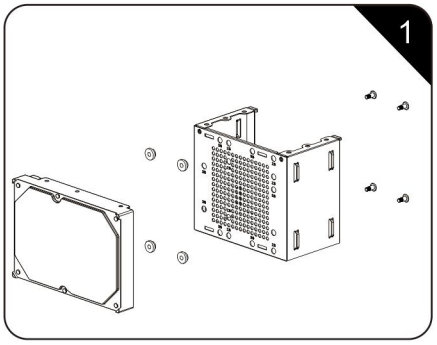

Put in gaskets before fixing
HDD/SDD with step screws
(Fix SSD with 2.5'' SSD screws)
(Fix HDD with 3.5'' HDD screws)

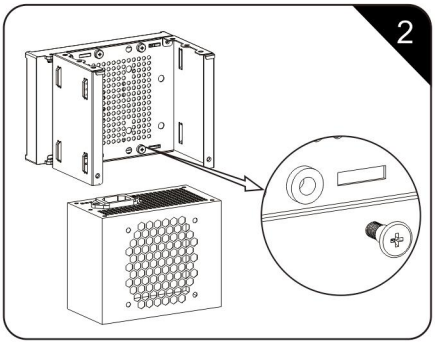

Put in the PSU and fix with hex screws

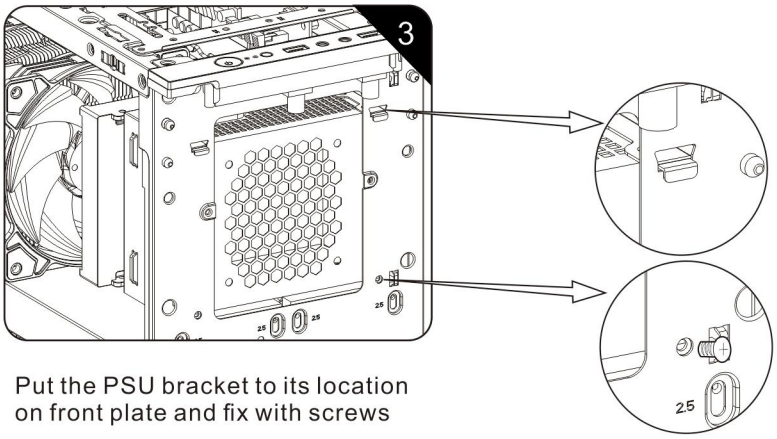

Put the PSU bracket to its location
on front plate and fix with screws

ITX Installation Plan - Installation of Micro PSU②

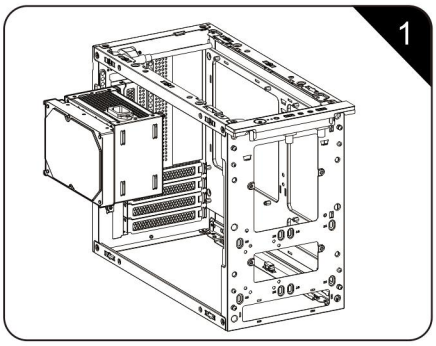

Put the cage with HDD and PSU back into the chassis

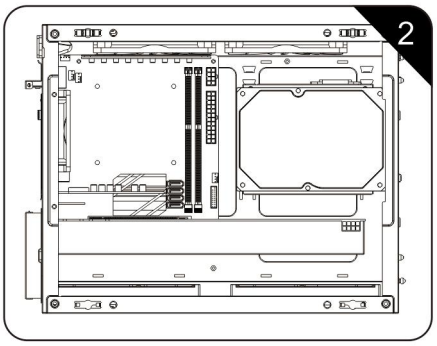

Fix with screws from back of MB tray

Max. CPU Cooler Height

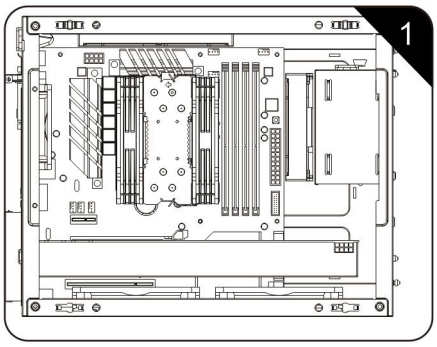

When GPU installed horizontally and without left side bracket: 155mm

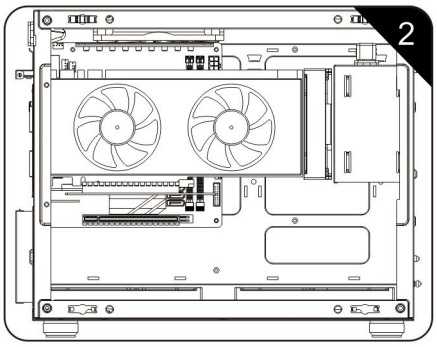

When GPU installed vertically: 88mm

Installation of Graphic Card

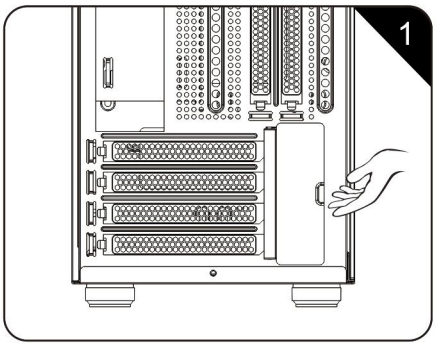

Lift PCI magnetic bay

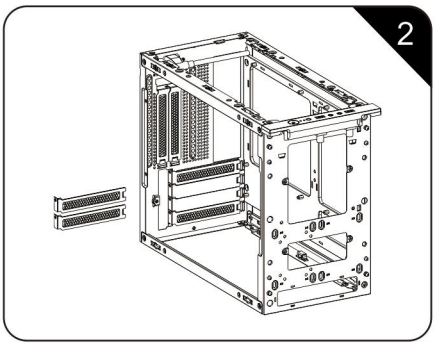

Unscrew and remove PCI bay

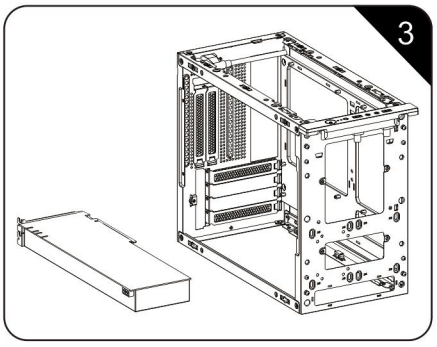

Insert GPU and fix with screw

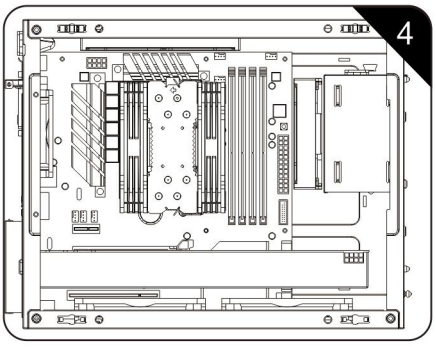

Finish

Length Limitation of Vertical GPU Installation

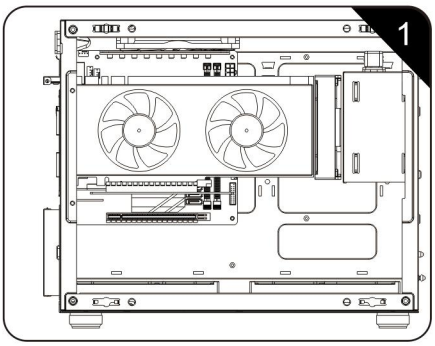

With Micro PSU, 245mm
(When PSU fixed to front plate)

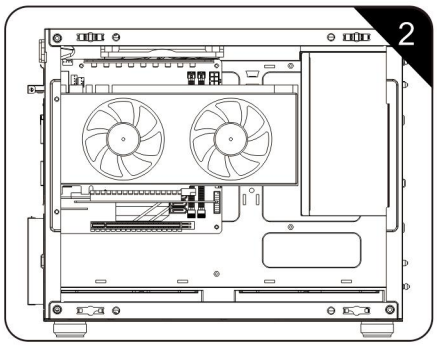

With ATX PSU, 245mm

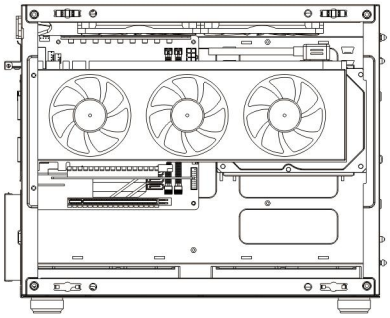

ITX Motherboard Installation
Plan - Max GPU Length
With Micro PSU, 335mm
(When Micro PSU fixed to MB Tray)

Installation of vertical GPU

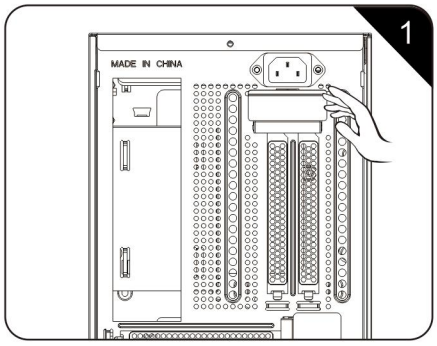

Lift PCI Magnetic bay, unscrew
to remove PCI bay

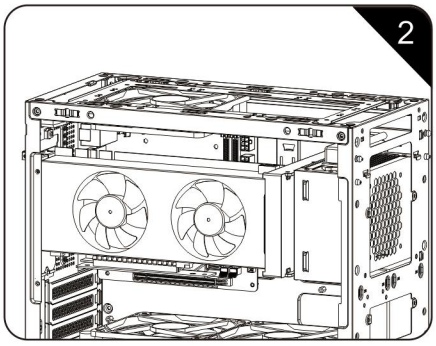

Insert GPU and fix with screws,
then connect with cable

Installation of HDD on HDD/Fan Bracket

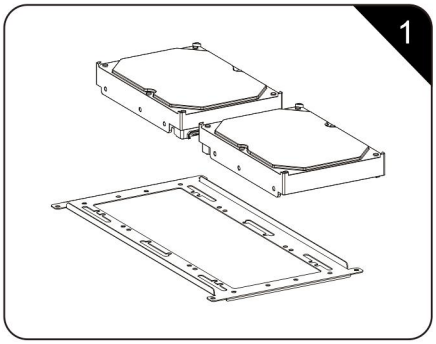

Get SSD/HDD and the bracket ready

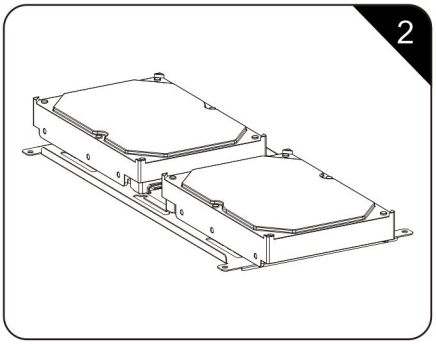

Put the SSD/HDD to the bracket on the side with lifted edge

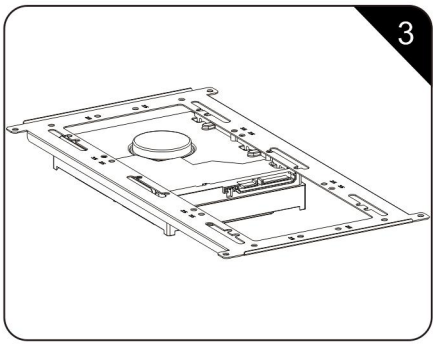

Fix with screws
(HDD screws for HDD)
(MB screws for SSD)

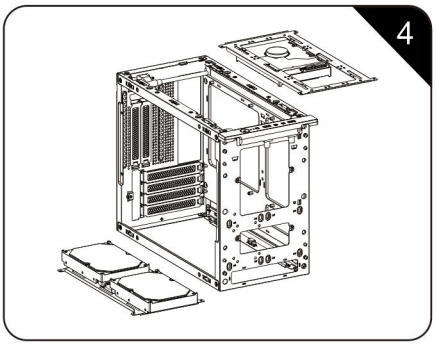

Fix it back to the top/bottom of chassis
(Only support HDD*1 on top when with ATX PSU)

Installation of HDD/SSD on left fan bracket

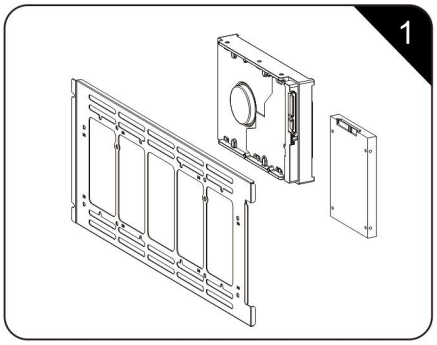

Get SSD/HDD and the bracket ready

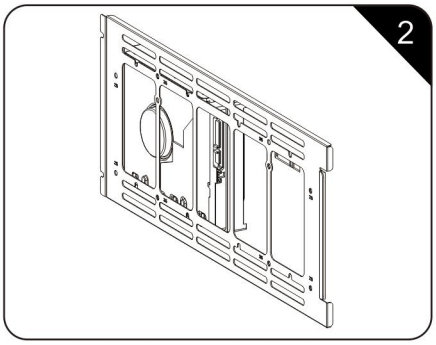

Put the SSD/HDD to the bracket on the side with lifted edge

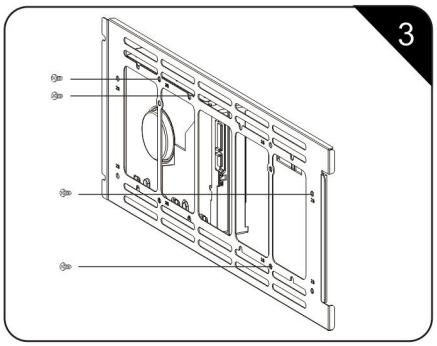

Fix with screws
(HDD screws for HDD)
(MB screws for SSD)

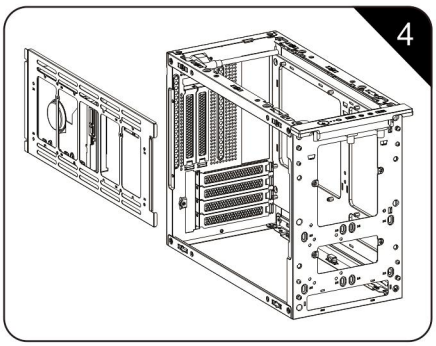

Fix it back to the side of chassis
(Only support HDD*1 on top when with ATX PSU)

Installation of Double SDD inside of Front Plate

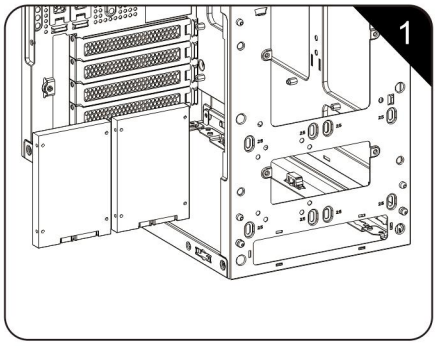

Put the SDD to the location as screws holes indicate

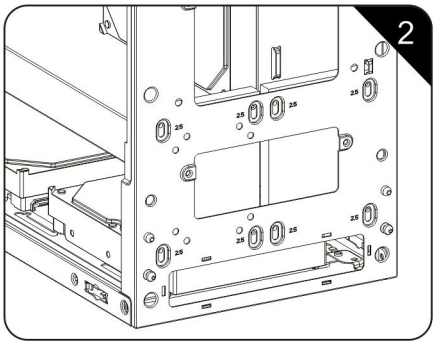

Use M/B screws to fix

Installation of Water Cooler on HDD/Fan Bracket (Supports only at the bottom)

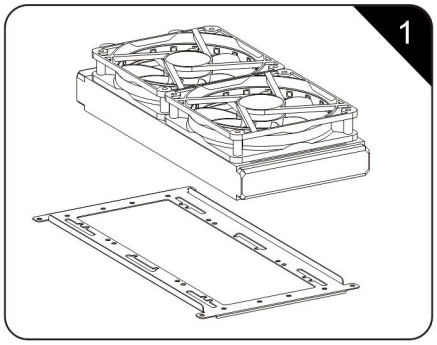

Fix 240/120 water cooler to the bracket as shown on the picture

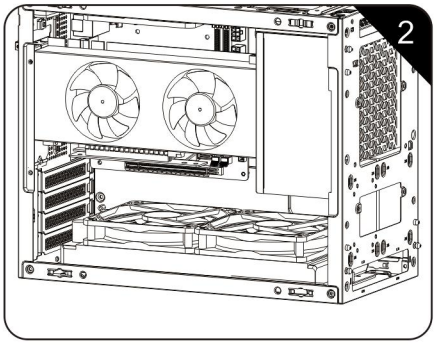

Fix bracket back into the bottom of chassis (Only supports water cooler installation on the bottom plate with vertical GPU and ITX mother board)

Installation of Rear Plate Fans

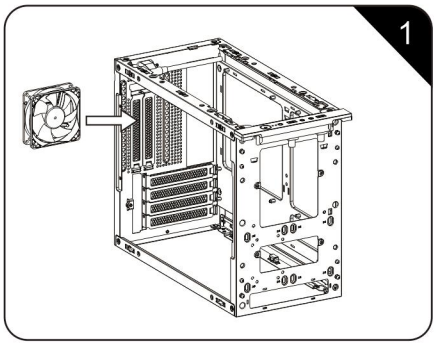

Fix 8cm fan
(Air outflow)

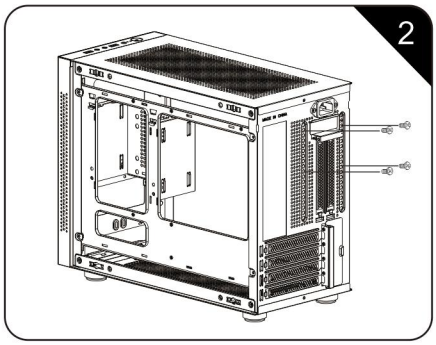

Fix screws from rear plate

Installation of Fans on HDD/Fan Bracket (Top)

(Support 2*12cm fan with Micro PSU, Support 1*12cm fan with ATX PSU)

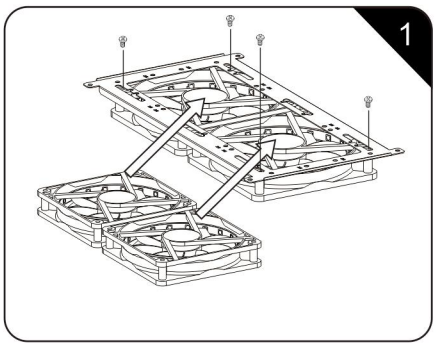

Fix 12cm fan to the bracket

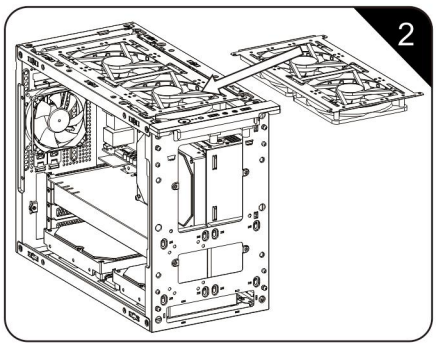

Fix Bracket back to the chassis

Installation of fans on HDD/Fan Bracket (Bottom)

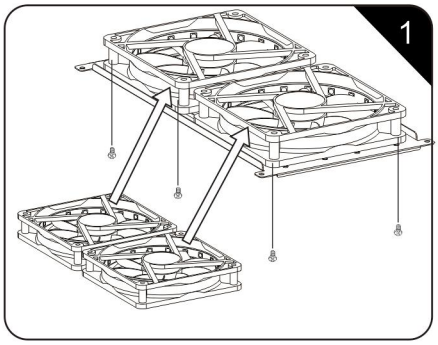

Fix 12cm fans to the bracket
(Air inflow from the bottom)

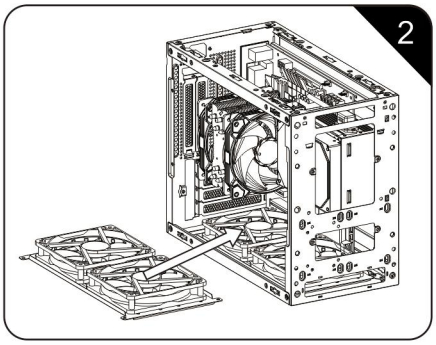

Fix the bracket back into the chassis

Installation of fans on HDD/Fan Bracket (Left Side)

(Support 1*12cm fans when using ATX PSU; Doesn' t support HDD when fans are installed)

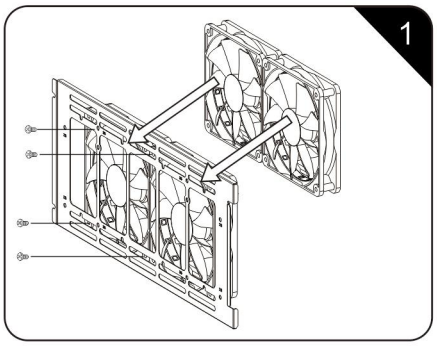

Fix 12cm fans to the bracket
(Air inflow from the left side)

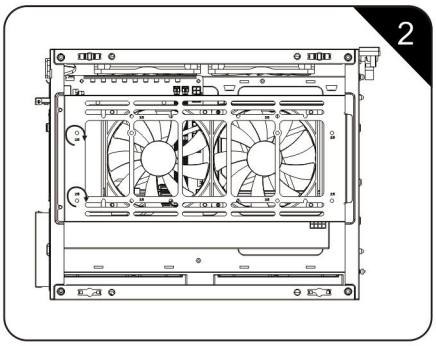

Fix the bracket back into the chassis

GALAX

REVOLUTION-03

MINI-TOWER CASE

GALAX.COM